LPS SERIES

Commercial Lighting

LPS-2X2-20-40W-MCTP-D

WESTGATE
THE FUTURE IS HERE...AND IT'S QUITE BRIGHT!

Customer Name:

Project Name:

Note: | Type:

MCTP
Selection:

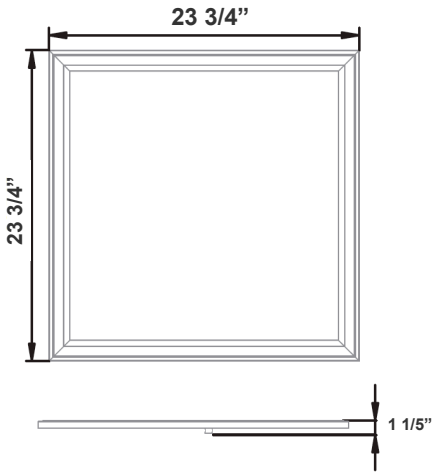

23 3/4"(W) x 23 3/4"(H) x 1 1/5"(D)

This indoor commercial lighting is ideal for hotels, offices, retail outlets, restaurants, parking garages, storage rooms, conference rooms, education facilities, and more.

Features

- 5-Year Warranty
- White Finish
- 50,000 Hours Rated Life
- Lens: Polycarbonate
- Multi Color Temperature & Power (selectable switch on back of fixture)

Technical Specifications

Electrical:

- Voltage: 120-277VAC 50/60Hz
- Wattage: 40W/33W/20W
- Power Factor: >0.97
- Efficacy:100LPW
- THD:<20%

Mechanical:

- White Finish
- Cold-Rolled Steel, 2.6" thickness
- Earthquake Hooks Built into the Housing
- Operating Temperature: -13°F ~ 104°F
- Lifespan: 50,000 hrs

Lighting:

- Multi Color Temperature (selectable switch on back of fixture)
- Dimmable: 0~10V Dimming
- Total Lumens: 4000LM/3300LM/2000LM
- Color Temperatures: 3000K/4000K/5000K
- Color Rendering Index: CRI ≥ 80

Applications:

- Ideal for hotel, offices, retail outlets, restaurant, parking garages, storage room, conference room, education facilities and more.

Other Models:

- 40W | 4000LM | LPS-1X4-20-40W-MCTP-D
- 50W | 5000LM | LPS-2X4-30-50W-MCTP-D

DIMMING 0-10V

Phone: (877) 805-2252 | Fax: (877) 805-2252
www.westgatemfg.com |

WG-02162022

Photometrics: LPS-2X2-20-40W-MCTP-D

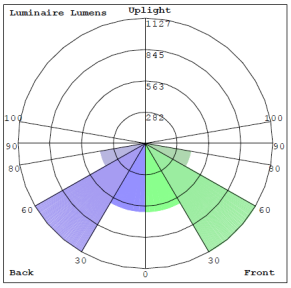

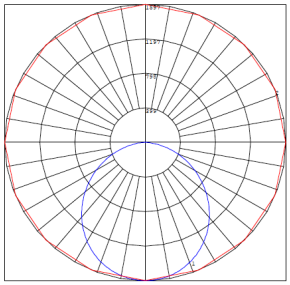

BUG Rating: B2-U1-G1

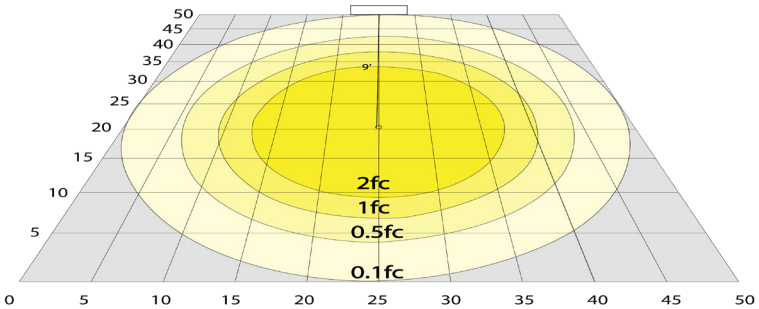

40W 5000K, Area 50'x 50' Mounting Height: 9'

Other Views:

Side View

Front View

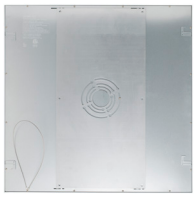

Back View

Performance Table: LPS-2X2-20-40W-MCTP-D

MODEL NO.	Wattage	Voltage	Lumens	Color Temp.	BUG Rating	LPW
LPS-2X2-20-40W-MCTP-D	40W	120~277V	4000LM	3000K 4000K 5000K	B2-U1-G1	100
	33W		3300LM			
	20W		2000LM			

Sample Ordering

Model		Size		Min		Max.Watt		Watt/Color Temp.		Dimming
LPS	-	2X2	-	20	-	40W	-	MCTP	-	D

Accessories:

Blank = No Option For Accessories
LPS-JBOX = JUNCTION BOX FOR 1 X 4, 2 X 2, 2 X 4 LPS T-BAR INSTALLATION

Factory-Installed Options:

Blank = No Option For Accessories
OPT-EM-AC2EXT = EMERGENCY EXTERNAL BACKUP BATTERY
OPT-FWH-63= 6FT 3-WIRE WHIP
OPT-FWH-65= 6FT 5-WIRE WHIP
OPT-FWH-66= 6FT 6-WIRE WHIP

ACCESSORIES:

LPS-JBOX

FACTORY-INSTALLED OPTIONS:

OPT-EM-AC2EXT

OPT-FWH-63
OPT-FWH-65
OPT-FWH-66

Example:

1. LPS-2X2-20-40W-MCTP-D (FOR LPS 2X2 MCTP FIXTURE 120-277V)

2. LPS-2X2-20-40W-MCTP-D (FOR LPS 2X2 MCTP FIXTURE 120-277V)
   LPS-JBOX (JUNCTION BOX FOR 1 X 4, 2 X 2, 2 X 4 LPS T-BAR INSTALLATION)

3. LPS-2X2-20-40W-MCTP-D (FOR LPS 2X2 MCTP FIXTURE 120-277V)
   LPS-JBOX (JUNCTION BOX FOR 1 X 4, 2 X 2, 2 X 4 LPS T-BAR INSTALLATION)
   OPT-EM-AC2EXT (6FT 6-WIRE WHIP)

Phone: (877) 805-2252 | Fax: (877) 805-2252
www.westgatemfg.com |