TGLK SERIES COMMERCIAL INDOOR LIGHTING

WESTGATE
THE FUTURE IS HERE...AND IT'S QUITE BRIGHT!

TGLK-1X4-MCTP
GEN 2 FRAME LIGHT KIT 4-PIECE VER. FOR EASY HANDLING

MCTP Multi Color Temperature & Multi Power/Wattage (Selectable)

Customer Name:

Project Name:

Note: | Type:

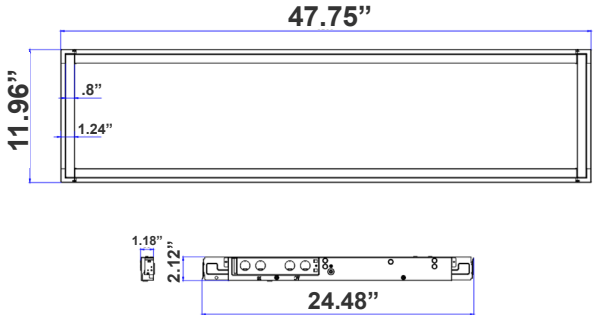

47.75”(H) x 11.96”(W) x 2.12”(D)

The LED Frame Light luminaire is a new design that creates innovative and outstanding lighting performance available to replace the 2x2 LED panel. It has a modern design and is easy to install. Ideal for new construction and remodel/replacement of fluorescent troffers or LED panels in commercial office spaces, schools, healthcare facilities, and retail merchandising areas. Compact ultra-thin appearance, simple installation, and outstanding performance. Assembling type in an individual package, easy to take away.

Features

- White Finish
- Multi Color Temperature & Multi Power (Selectable Switch in Driver box)
- 5-Year Warranty
- High Quality LED Chips Provide High Efficiency, Heat Dissipation, Stability, and Lumen Maintenance

Technical Specifications

Electrical:

- Voltage: 120-277V
- Power Factor: >0.92
- Wattage: 17W/26W/36W
- Efficacy: 110 LPW

Mechanical:

- Extruded Aluminum with White Painting
- Surge Protector
- Maximum Ambient Temperature: -22°F to +104°F
- Rated life: 50,000 hrs
- Driver/Junction Box is Separate and Connects to the Fixture with a 3Ft. Dongle.
- Driver/Junction Box Installs On Adjacent Grid, On Top, Using Your Choice Of T-bar Bracket or Westgate T-bar Bracket Model (ELB-TBAR1)
- IP20 Indoor Use Only

Lighting:

- Performance Lens Assembly Delivers Unique Beam Angles and Reduces Glare
- Dimmable: 120-277V 0~10V Driver for Continuous Dimming
- Total Lumens: 3960LM Max.
- Driver Disconnect Provided Where Required to Comply with US and Canadian codes
- Color Temperatures: 3500K/4000K/5000K
- Multi CCT & Multi Power (Selectable Switch in Driver Box)
- Color Rendering Index: CRI ≥ 80

Applications:

- Retail, Schools, Offices,Healthcare, Conference rooms, Hospitality, Corridors,Reception areas, Foyer Library

UL LISTED DIMMING 1-10V 5 YEAR

Phone: (877) 805-2252 | Fax: (877) 805-2252
www.westgatemfg.com |

WG-02192025

Photometrics: TGLK-1X4-MCTP

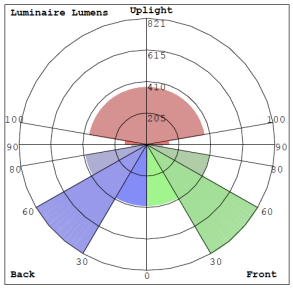

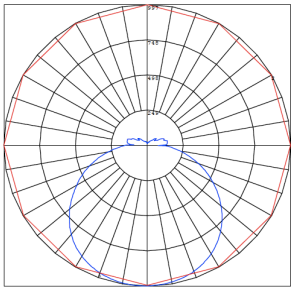

BUG Rating: B1-U3-G1

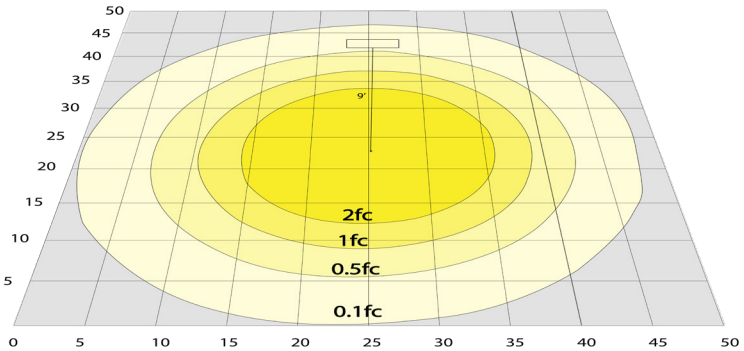

Area 50'x 50' Mounting Height: 9'

Other Views:

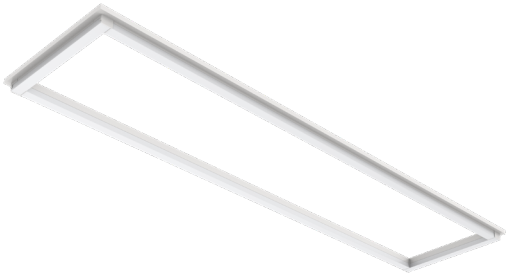

Side View

Front View

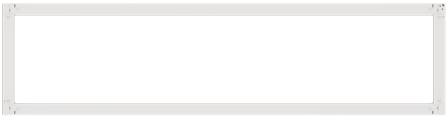

Back View

Performance Table: TGLK-1X4-MCTP

MODEL NO.	Wattage	Lumens	LPW	Color Temp.	Voltage	BUG Rating
TGLK-1X4-MCTP	17W 26W 36W	1870LM 2860LM 3960LM	110	3500K 4000K 5000K	120-277V	B1-U3-G1

Sample Ordering

Model		Size		CCT & Power
TGLK	-	1X4	-	MCTP

Factory-Installed Option:

Blank = No Option For Accessories
OPT-EM-TGLK = Installed on a T-Bar Bracket to Clip on Top the T-Bar Grid
TBAR1EM = Driver
OPT-FWH-63 = 6FT 3-Wire Whip
OPT-FWH-65 = 6FT 5-Wire Whip
OPT-FWH-66 = 6FT 6-Wire Whip

FACTORY-INSTALLED OPTION:

OPT-EM-TGLK
Installed on a T-Bar Bracket to Clip on Top the T-Bar Grid

OPT-FWH-63
OPT-FWH-65
OPT-FWH-66
6FT 3/5/6 Wire Whip

Phone: (877) 805-2252 | Fax: (877) 805-2252
www.westgatemfg.com |